InSb x2 non-inverting
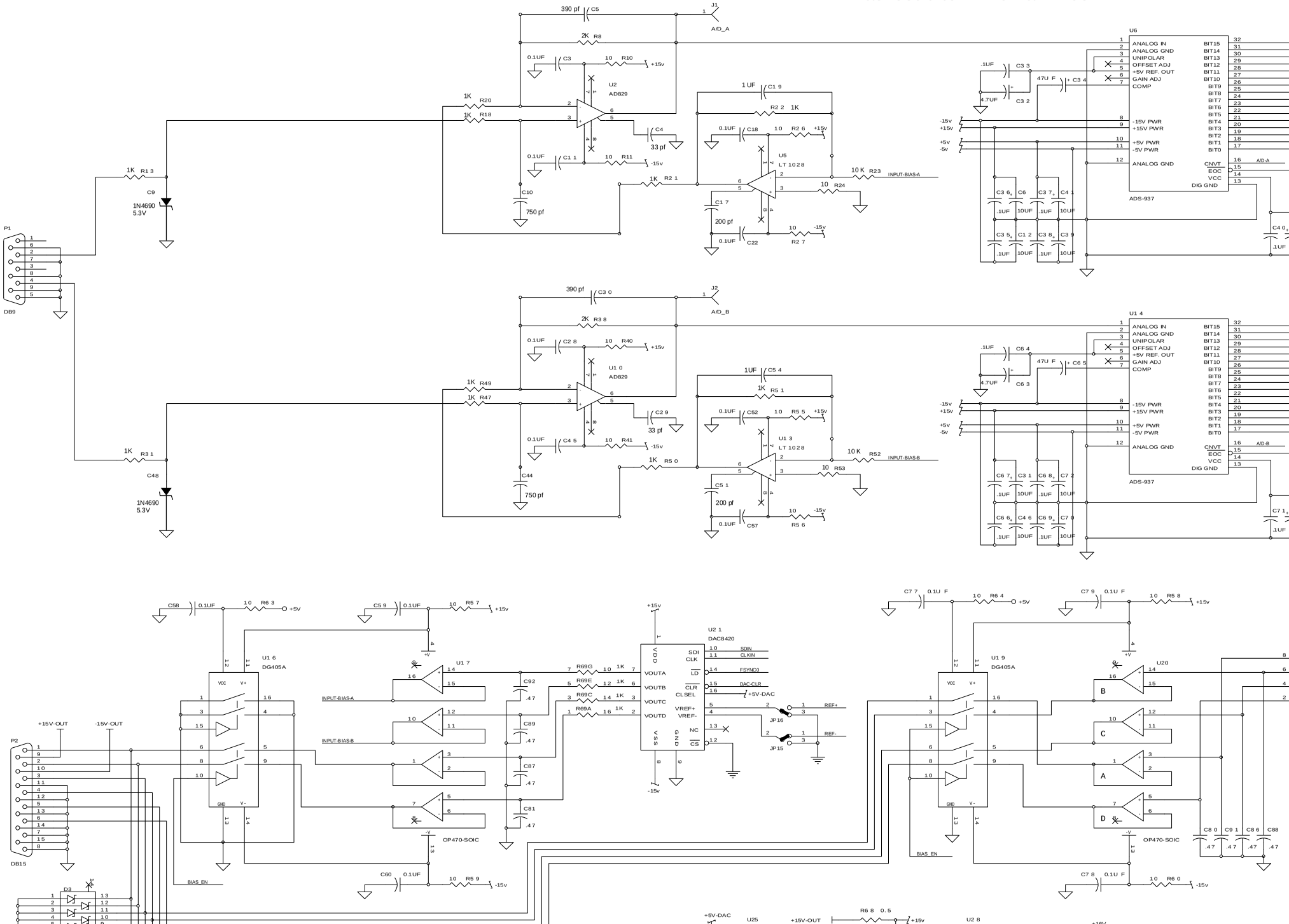
Bias' set 0 to -4V on all lines