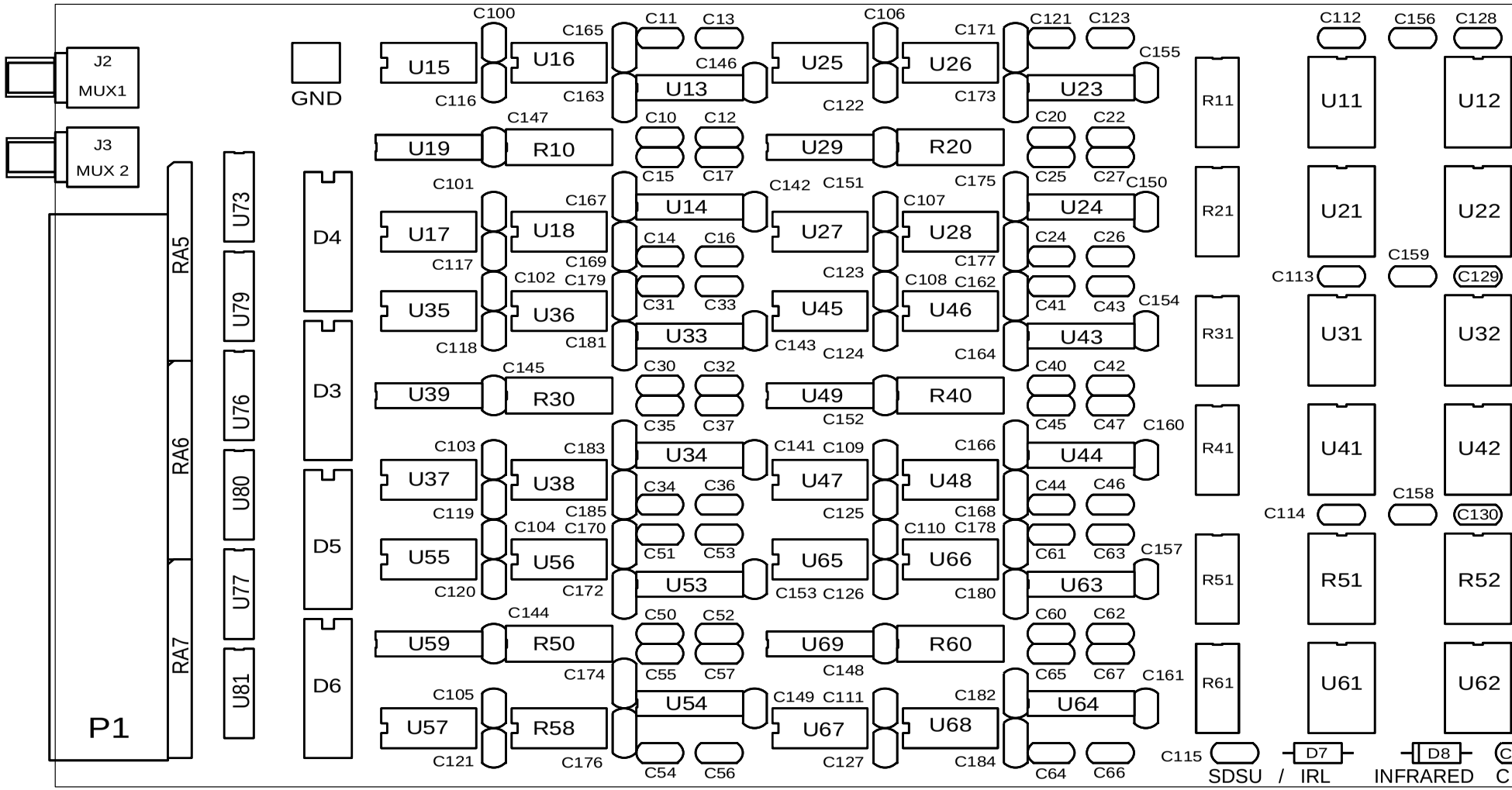
J2
MUX1
J3
MUX 2
GND
P1
RA5
RA6
RA7
U73
U79
U76
U80
U77
U81
D4
D3
D5
D6
U15
U16
U13
U25
U26
U23
U19
R10
U29
R20
U17
U18
U14
U27
U28
U24
U35
U36
U33
U45
U46
U43
U39
R30
U49
R40
U37
U38
U34
U47
U48
U44
U55
U56
U53
U65
U66
U63
U59
R50
U69
R60
U57
R58
U54
U67
U68
U64
R11
R21
R31
R41
R51
R61
U11
U12
U21
U22
U31
U32
U41
U42
R51
R52
U61
U62
C100
C165
C11
C13
C106
C171
C121
C123
C112
C156
C128
C155
C116
C163
C146
C122
C173
C147
C10
C12
C20
C22
C15
C17
C25
C27
C101
C167
C142
C151
C175
C150
C107
C14
C16
C24
C26
C117
C169
C123
C177
C113
C159
C129
C102
C179
C31
C33
C108
C162
C41
C43
C154
C118
C181
C143
C124
C164
C145
C30
C32
C40
C42
C35
C37
C152
C45
C47
C160
C103
C183
C141
C109
C166
C34
C36
C44
C46
C119
C185
C125
C168
C114
C158
C130
C104
C170
C51
C53
C110
C178
C61
C63
C157
C120
C172
C153
C126
C180
C144
C50
C52
C60
C62
C55
C57
C148
C65
C67
C161
C174
C105
C149
C111
C182
C54
C56
C127
C184
C64
C66
C115
D7
D8
SDSU
/
IRL
INFRARED